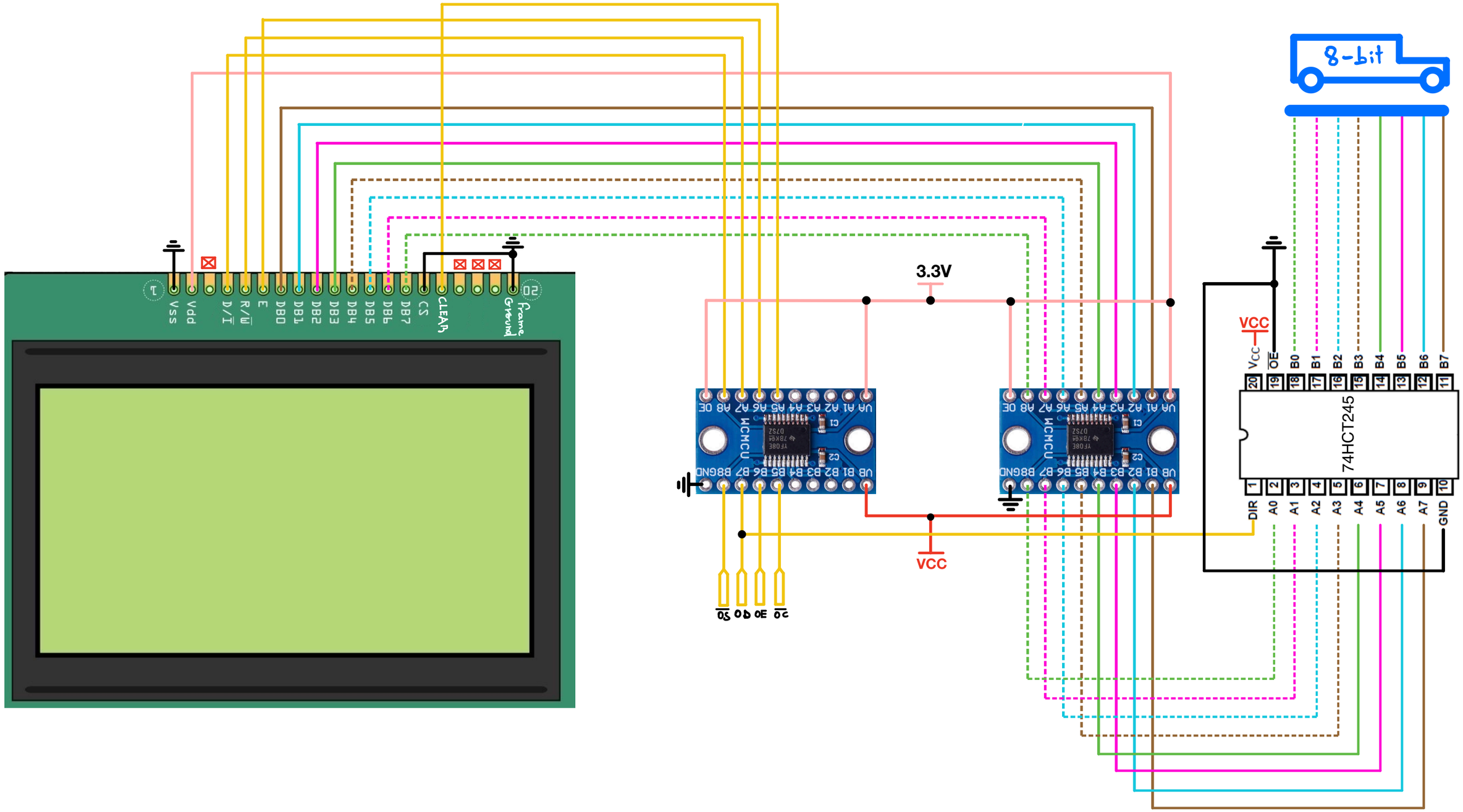

$\overline{OS}$: Data/Command selector (Data by default (1) Command when asserted(0))

OD: Data (Write by default (0) Read when asserted(1))

OC: Reset/Clear display

$\overline{OE}$: OLED microcontroller enable

$\overline{OS}$ Data/Command selector (Data by default (1) Command when asserted (0))

OC Reset/Clear display

OD Data

read	write
1	0

(Write by default Read when asserted)

$\overline{OE}$ OLED microcontroler enable

$\overline{OS}$: Data/Command selector (Data by default (1) Command when asserted(0))

OC: Reset/Clear display

OD: Data (Write by default (0) Read when asserted(1))

$\overline{OE}$: OLED microcontroller enable